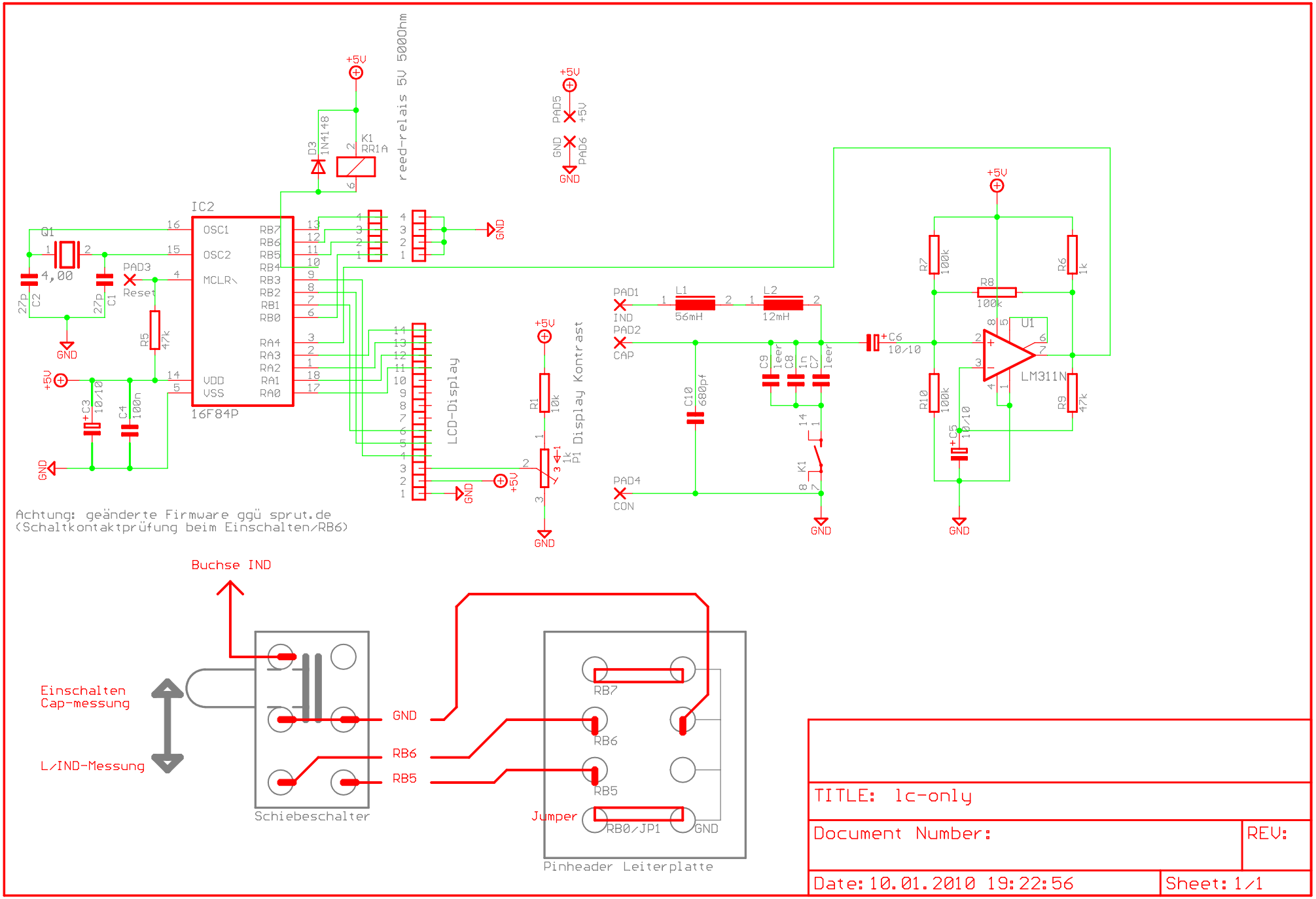

TITLE: lc-only

Document Number:

REV:

Date: 10.01.2010 19:22:56

Sheet: 1/1

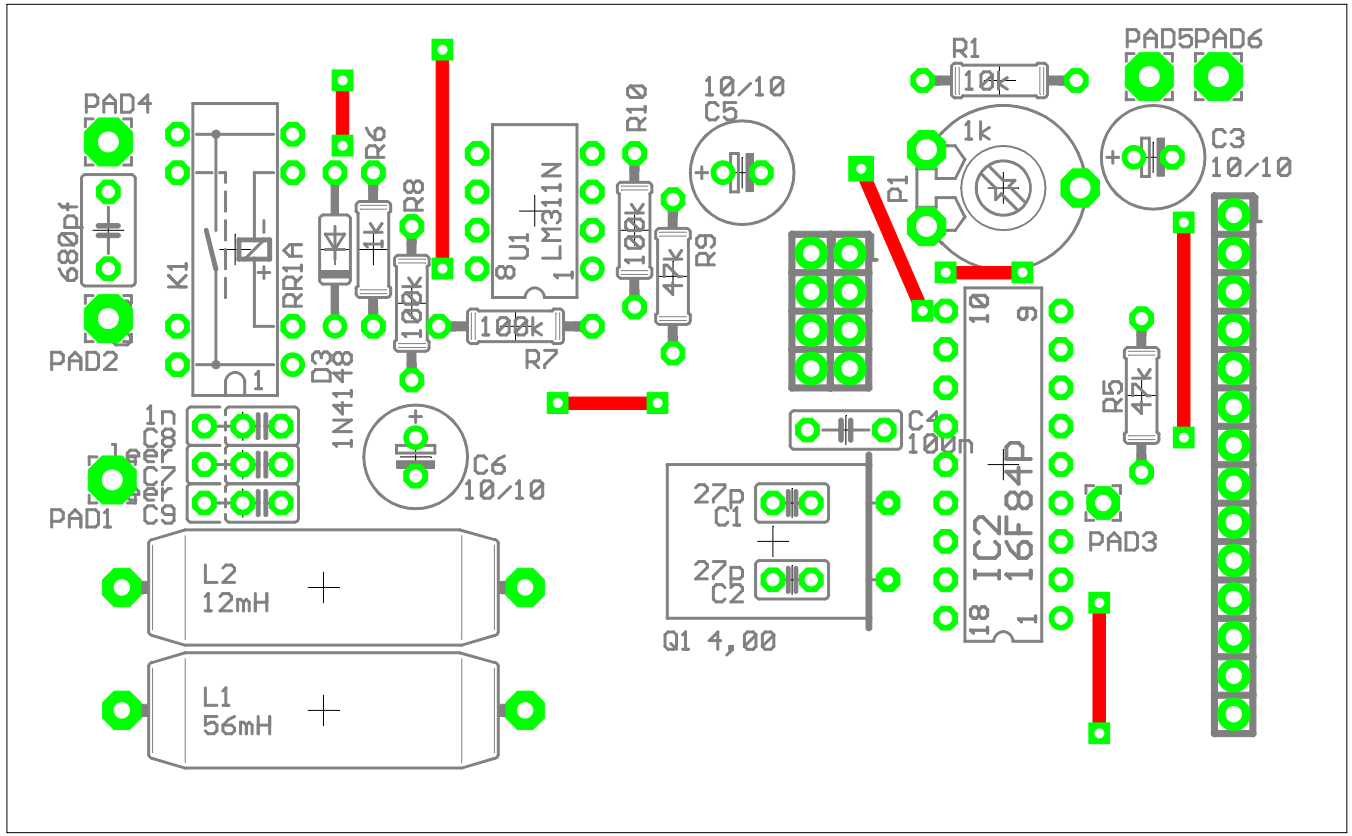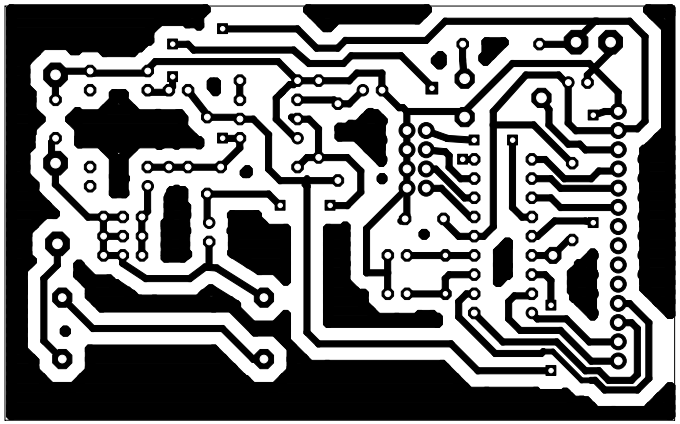
PAD4
680pf
PAD2
K1
RR1A
D3
1N4148
R6
1k
R8
100k
U1
LM311N
R7
100k
R10
100k
R9
47k
10/10
C5
R1
10k
1k
P1
PAD5
PAD6
C3
10/10
C4
100n
IC2
16F84P
R5
47k
PAD3
C8
C7
C9
PAD1
C6
10/10
27p
C1
27p
C2
Q1 4,00
L2
12mH
L1
56mH